International Engineering Research Journal

Finite Element Analysis and Optimization of Boom of Backhoe Loader

Santosh U. Bhoomkar[1], D. H. Burande[2]

[1]PG Student, Mechanical Engineering, Sinhgad College of Engineering, Pune 41.
[2]Associate Professor, Mechanical Engineering, Sinhgad College of Engineering, Pune 41.

.

Abstract

In static analysis of the boom of backhoe-loader has to be performed with the finite element method (FEM). The main objective of this study is to reduce the weight of boom of backhoe loader, which will satisfy the stiffness, strength and other requirements. So the optimum configuration and advanced technology have to be incorporated to achieve minimum weight. This is carried out to simulate and strengthen the boom concerning with stress under maximum loading condition and different boundary conditions. The result of the study is to weight of the boom has been decreased by nearly 5%.

Keywords: *Boom of Backhoe Loader; Finite Element Analysis, Optimization*

1. Introduction

The Backhoe Loader is mainly used for excavation work and earth moving due its versatility. In the construction work consider the backhoe loader to be the main working machine of earthmovers [1]. The parts of Backhoe loader such as boom, arm, and loader arm limit the life expectancy of the backhoe loader. Therefore, the Parts of backhoe loader parts must be strong enough to cope with caustic working conditions. It can be concluded that, in parts of backhoe loader parts it is important to analysis of strength [2].

Fig. 1 Backhoe loader machine.

In a Static force analysis of the mechanism is done considering different critical operating condition of mechanism. It has been found that the condition at which mechanism is producing maximum breakout forces this is the most critical working condition [3]. These analysis show that the critical points of the design early and so one can improve the design of model before producing prototypes. The analysis has been carried out using ANSYS and finite element packet program.

2. Literature review

1. Juber Hussain Qureshi et al. (2012) This paper deals with the finite element analysis of the boom of backhoe loader. Author has carried out the finite element analysis of the boom. The results are in the form of stress and deformation plots. The Finite element Analysis of the boom is made followed by the results of Dynamic study of the Boom of the machine. In this paper researcher provides the platform to understand the Modeling and FEA of Boom of Backhoe Loader, which was already carried out by other researchers for their related applications and it can be helpful for the development of boom of backhoe loader.
2. AhmetErklig, EyüpYeter et al. (2013) In this study, static structural analysis of backhoe-loader arms has been performed with the finite element method (FEM). The aim of this study is to simulate and strengthen the back and front arms of the backhoe-loader concerning with stress under maximum loading condition and different boundary conditions. According to analysis result, back and front arms of the backhoe-loader are strengthened with the use of reinforcements. As a result of the study, strength of the arms has been increased by nearly 20%. The backhoe-loader back and

front arm have been analyzed with the maximum loads and boundary conditions using FEM. ANSYS workbench FEA program has been used in the analysis. Analyses have been carried out for the maximum hydraulic cylinder forces. Symmetrical and unsymmetrical boundary conditions have been examined.

4. Gaurav K Mehta, V. R. Iyer, Jatin Dave et al. (2009) The paper describes Finite element analysis of the robotic mechanism of an excavator – that contains bucket, arm and boom using CAD/CAM & CAE tools. Also design changes have been suggested in the region of these components where stresses are not under allowable limit. The designed mechanism is proposed to be used in excavator which is having twelve tons gross weight. The methodology described has considerably reduced the development time and is more accurate.

5. Bhaveshkumar P. Patel and J. M. Prajapati et al. (2011) This paper provides the platform to understand the Modeling, FEA and optimization of backhoe excavator attachment, which was already carried out by other researchers for their related applications and it can be helpful for development of new excavator attachment. It can be concluded that, force analysis and strength analysis is an important step in the design of excavator parts. Finite Element Analysis (FEA) is the most powerful technique in strength calculations of the structures working under known load and boundary conditions. In general, computer aided drawing model of the parts to be analyzed must be prepared prior to the FEA. It is also possible to reduce the weight of the mechanism by performing optimization task in FEA.

6. Sachin B. Bende, Nilesh P. Awate et al. (2013)
The present work concentrate on the study of the components of the excavator in order to identify the problems faced while performing the lifting and digging operations and to provide a design solution by using CAD-CAE systems. For light duty construction work, generally mini hydraulic backhoe excavators are used and mostly there are soil surfaces for excavation. So, design of backhoe excavator is critical task in context of digging force developed through actuators during the digging operation. The important criteria for the design to be safe are that, the digging forces developed by actuators must be greater than that of the resistive forces offered by the surface to be excavated. The two important factors considered during designing an excavator arm are productivity and fuel consumption. As the present mechanism used in excavator arm is subjected to torsional and bending stresses during lifting and digging operation respectively, because of which failure occurs frequently at the bucket end of the arm. So, the new mechanism of excavator arm is designed and analysis is done at existing digging force and also at newly calculated digging force. Also the bucket volume is increased to compensate for the loss in production due to the reduction in digging force.

7. Caiyuan Xiao and Zhang Guiju et al. (2015)
This paper deals with vibration responses of the hydraulic excavator components with the approach of FEA. It was found that both deformations of the boom and the bucket rod are transferred from a single direction to a multi direction. With the modal order increasing, structure's inherent frequency increases and the vibration modes also become more complex. The first two order modes of the boom and the arm are of simple single direction bending. But the vibration mode after the third order transforms into various combinations of vibrations deformation. At the same time, the degree of deformation is higher.The boom's maximum deformation is at the middle position of the hinge point between the front plate and the boom cylinder, as well as near the hinge point between the rear plate and the boom cylinder. The maximum deformation distributes on the middle of the bucket rod, namely between the hinge point of the rocker and the rear plate as well as the nearly back supporting plate.

3. Problem statement

Due to severe working conditions, loader parts are subject to high loads. High level of stresses can cause the damage of critical parts of backhoe loader like boom, arm, bucket and it will adversely affect the productivity of machine. Nowadays, weight is major concern while designing the machine components, as performance is proportional to the power to weight ratio. So for reducing the weight of the boom as well as for smoothing the performance of machine, optimization is needed. It will also help to reduce the overall coast of the backhoe loader.

4. Objectives

- The main objective in this project is to reduce the weight of the boom of backhoe loader and its optimization.
- Another objective is to determine the design solution that reduces high level of stresses that are induced in the boom of backhoe loader.

5. Analysis of Boom

Solid geometries of front and back arm are given in Figures 2(a) and (b) respectively.

Assumptions used in the analysis are:

- Material behavior is linear elastic and strains are small. Therefore, linear elastic analysis will be carried out.
- Pins and links are assumed as rigid.
- The loads are applied statically.
- Material properties of structures after heat treatment are not changing.

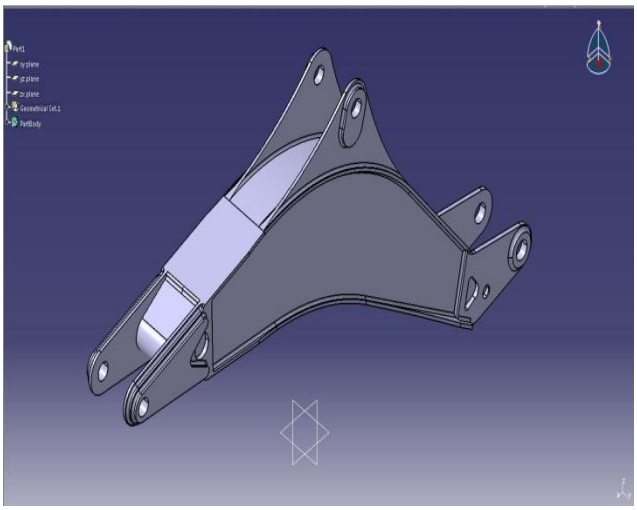

Fig. 2(a)

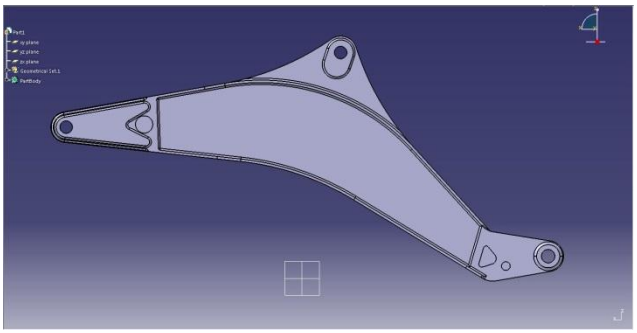

Fig. 2(b)

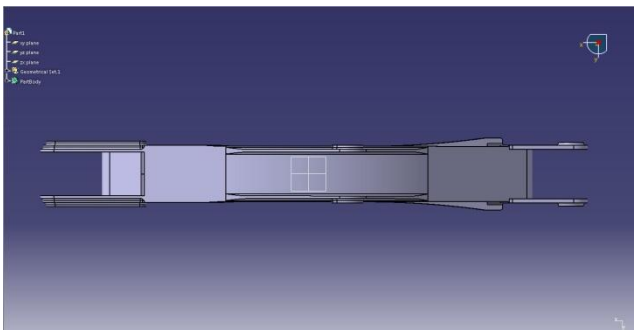

Fig. 2(c)

Fig. 5.1 boom solid models.

6. Calculation

6.1 Static force analysis

The calculation for the static force analysis of the backhoe loader for the condition in which the mechanism produces the maximum breakout force has to be done. The condition for the maximum breakout force is the most critical one as it produces the highest breakout force, and thus for this condition the force analysis is to be done, and will be used as a boundary condition for the static FEA.

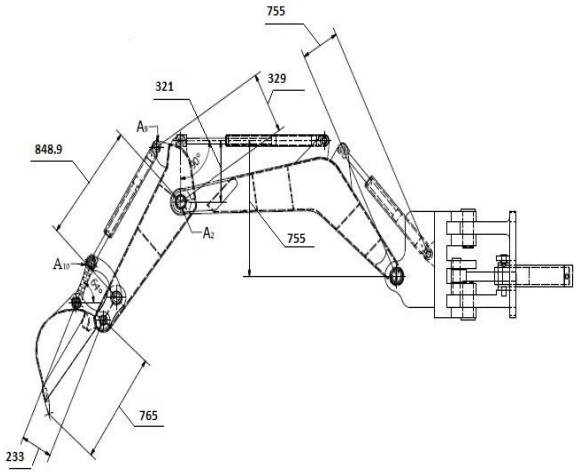

Fig. 6.1 Maximum breakout force configuration

Fig. 3.1 shows that the configuration in which mechanism is producing maximum breakout force. The free body diagram of bucket, arm, and boom, with directions.

6.1.1 Bucket static forces:

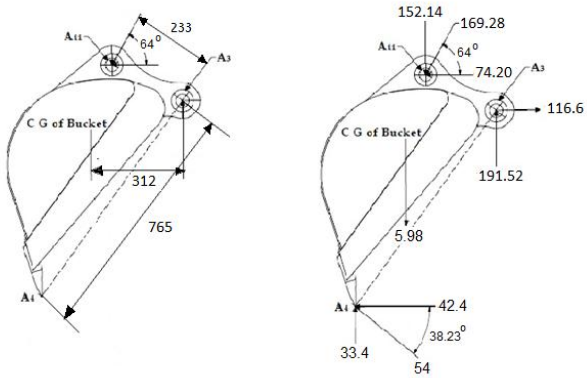

Fig. 6.1. Free body diagram of bucket

All the forces in fig.2 are in kN.
Maximum bucket digging force is considered to be 54kN.

TATA JD 315V	General backhoe loader
Bucket Digging force	54 kN

The static forces on the joints can be calculated by considering the summation of forces must be equal to the zero (ΣF = 0) and summation of moments equal to the zero (ΣM = 0) for equilibrium condition of the bucket, arm and boom respectively.
Firstly resolution of the digging force acting on bucket teeth (at point A_4)
$F_{4H}=F_4 \cdot \cos\theta$…….. (1)
F_{4H} = 42.4kN
$F_{11V}=F_{11} \cdot \sin\beta_{11}$……. (5)
F_{11V}= 152.14kN
Where,
F_{11} = force acting on hinge point of the idler link on bucket = 169.28kN
β_{11} = angle between force F_{11} and the horizontal = 64º

F_{11H} = horizontal (X) component of F_{11}
F_{11V} = vertical (Y) component of F_{11}

Again considering bucket in equilibrium,

$\Sigma F_X = 0$

$F_{3H} - F_{11H} - F_{4H} = 0$ ..... (7)

$F_{3H} = 116.6$kN

$\Sigma F_Y = 0$

$F_{3V} - F_{11V} - F_{4V} - F_{gh} = 0$ ..... (8)

$F_{3V} = 191.52$kN

Where,

F_{3H} = horizontal (X) force at point A_3
F_{3V} = vertical (Y) force at point A_3

The forces on each of the joints of the bucket of backhoe loader are shown in Table 1.

Table 1: Static forces on the bucket joints:

Joint of the bucket	Horizontal (X) component (kN)	Vertical (Y) component (kN)
A_4	-42.4	33.4
A_{11}	-74.20	-152.14
A_3	116.6	191.52

The negative sign shows that the horizontal component for the leftward direction force and the vertical component for the force downward direction.

6.1.2 Arm static forces

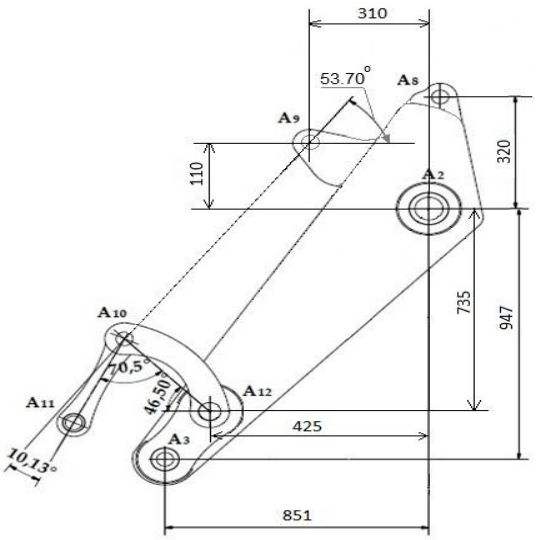

Fig. 6.1.2(a) Free body diagram of arm of backhoe loader Dimensions.

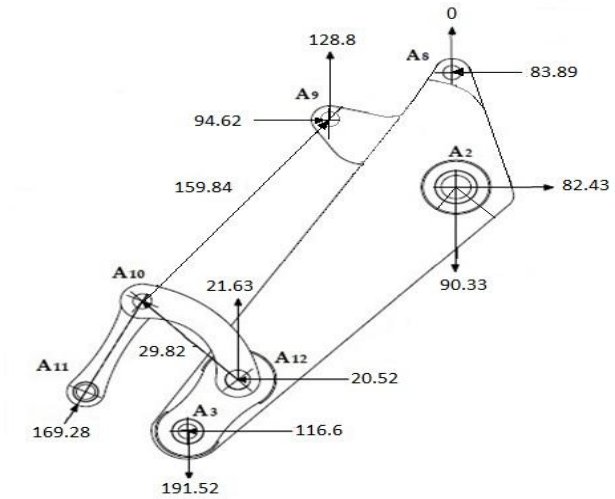

Fig. 6.1.2(b) Free body diagram of arm of backhoe loader – Resolved Forces.

In Fig.3.1.2 shows the important dimensions for the moments and resolution of forces respectively. Fig. 3.1(b_2) shows the static forces acting at the different points on the arm.

By applying Lami's theorem at point A_{10},

$$\frac{F11}{\sin(\alpha)} = \frac{F9}{\sin(\beta 10)} = \frac{F12}{\sin(\gamma)} \quad \ldots\ldots\ldots\ldots\ldots\ldots\ldots\ldots (9)$$

Where,

F_{11} = force acting on idler link ($A_{11}A_{10}$) = 169.28 KN
F_9 = force acting on arm through the bucket cylinder
F_{12} = the force acting on the intermediate link ($A_{10}A_{12}$) from the idler link ($A_{11}A_{10}$) at an angle of the β_{10}
α = angle between forces F_9 and F_{12} = 99.37^0
β_{10} = angle between forces F_{11} and F_{12} = 70.5^0
γ = angle between forces F_9 and F_{11} = 190.13^0

From equation (9), we have

$$\frac{F11}{\sin(\alpha)} = \frac{F9}{\sin(\beta 10)} \quad \ldots\ldots\ldots\ldots\ldots\ldots\ldots\ldots\ldots (10)$$

$F_9 = 159.84$ kN

Again using equation (9), we get

$$\frac{F11}{\sin(\alpha)} = \frac{F12}{\sin(\gamma)} \quad \ldots\ldots\ldots\ldots\ldots\ldots\ldots\ldots\ldots (11)$$

$F_{12} = -29.82$kN

Resolution of the force F_{12}at point A_{12},

$F_{12H}=F_{12}\cdot\cos\beta_{12}$..... (12)

$F_{12H}= -29.82\cdot\cos 46.50º$

$F_{12H}= -20.52$kN

$F_{12V}=F_{12}\cdot\sin\beta_{12}$..... (13)

$F_{12V}= -29.82\cdot \sin 46.50º$

$F_{12V}= -21.63$kN

Where,

F_{12H} = horizontal (X) force at point A_{12}
F_{12V} = vertical (Y) force at point A_{12}
β_{12} = angle made by intermediate link with horizontal reference = 46.50º

Resolution of the force F_9 at point A_9,

$F_{9H} = F_9\cdot\cos\beta_9$..... (12)

$F_{9H} = 94.62$kN

$F_{9V} = F_9\cdot\sin\beta_9$..... (13)

$F_{9V} = 128.8$kN

Where,

F_{9H} = horizontal (X) force at point A_9

F_{9V} = vertical (Y) force at point A_9

B_9 = angle made by force F_9 on arm through bucket cylinder with horizontal = 53.70º

Considering the arm in equilibrium,

Taking moment about the arm to boom hinge point (A_2) leads to;

$\Sigma M_{A2} = 0$,

$-F_8 \cdot l_8 - F_{3V} \cdot l_{3H} + F_{3H} \cdot l_{3V} + F_{12V} \cdot l_{12H} + F_{12H} \cdot l_{12V} + F_{9V} \cdot l_{9H} + F_{9H} \cdot l_{9V} = 0$…… (14)

Where,

F_8= force acting at arm cylinder front end hinge point (A_8)

l_8= distance between the arm hinge point (A_2) and arm cylinder front end hinge point (A_8) in

Maximum breakout force condition = 320 mm

F_{3V}= vertical force component acting on bucket hinge point (A_3) =191.52kN

l_{3H}= horizontal distance between the bucket hinge pt. (A_3) and arm hinge pt. (A_2) = 851 mm

F_{3H}= horizontal force component acts on bucket hinge point (A_3) =116.6kN

l_{3V}= vertical distance between the bucket hinge pt. (A_3) and arm hinge pt. (A_2) =947 mm

F_{12H}= horizontal force acting on intermediate link due to idler link = 20.52kN

l_{12V}= vertical distance between arm hinge point (A_2) and intermediate link hinge point on arm

(A_{12}) = 735 mm

F_{12V} = vertical force acting on intermediate link due to idler link = 21.63kN

l_{12H} = horizontal distance between arm hinge point (A_2) and intermediate link hinge point on arm

(A_{12}) = 425 mm

F_{9H}=horizontal force acting on arm through bucket cylinder =94.62kN

l_{9V}= vertical distance between arm hinge point (A_2) and the bucket cylinder end hinge point (A_9)

= 110 mm

F_{9V} = vertical force acting on arm through bucket cylinder = 128.8kN

l_{9H} = horizontal distance between arm hinge point (A_2) and the bucket cylinder end hinge point

(A_9) = 310 mm

By substituting the values in equation (14),

$-F_8 \cdot (320) - (191.52) \cdot (851) + (116.6) \cdot (947) + (-21.63) \cdot (735) + (-20.52) \cdot (425) + (128.8) \cdot (310) + (94.62) \cdot (110) = 0$

F_8 = -83.89kN

$\Sigma F_X = 0$

$F_{2H} - F_{3H} - F_{12H} - F_8 + F_{9H} = 0$…… (15)

F_{2H} = -82.43kN

$\Sigma F_Y = 0$

$-F_{2V} - 191.52 + (-83.89)\ F_{12V} - F_{ga} + F_{9V} = 0$ ……(16)

F_{2V} = -90.33kN

Where,

F_{2H} = horizontal (X) force at point A_2

F_{2V} = vertical (Y) force at point A_2

The forces on each of the joints of the backhoeloader arm are shown in Table 2.

Table 2: Static forces on the arm joints

Joints	Horizontal (X) component (kN)	Vertical (Y) component (kN)
A_3	116.6	191.52
A_{12}	-20.52	-21.63
A_9	94.62	128.8
A_8	-83.89	0
A_2	-82.43	-90.33

6.1(c) Boom static forces

3.1(c_1) shows the important dimensions and angles for the moments and the resolution of forces. The Fig. 4(b) shows the static forces acting at the different points on the boom.

The force F_7 is the force by arm at point A_7 through arm cylinder which is same as the force F_8 but direction is opposite.

Resolution of the force F_7 at point A_7,

$F_{7H} = F_7 \cdot \cos \beta_7$……..(17)

F_{7H} = 83.89·cos 0

F_{7H} = 83.89kN

$F_{7v} = F_7 \cdot \sin \beta_7$…….. (18)

F_{7v}= 0kN

Where,

F_{7H} = horizontal (X) force at point A_7

F_{7V} = vertical (Y) force at point A_7

B_7 = angle made by force on boom through arm cylinder with horizontal = 0º

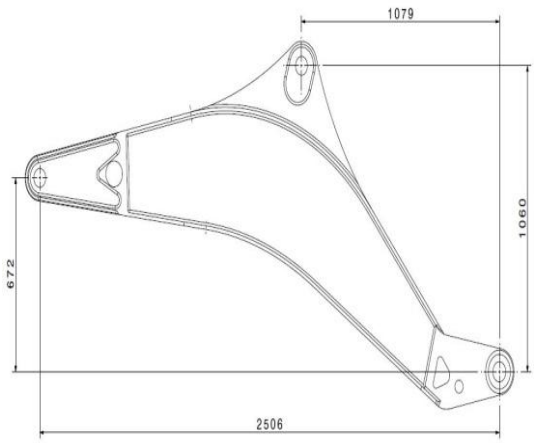

Fig. 6.1(c_1) Dimensions of backhoe loader boom

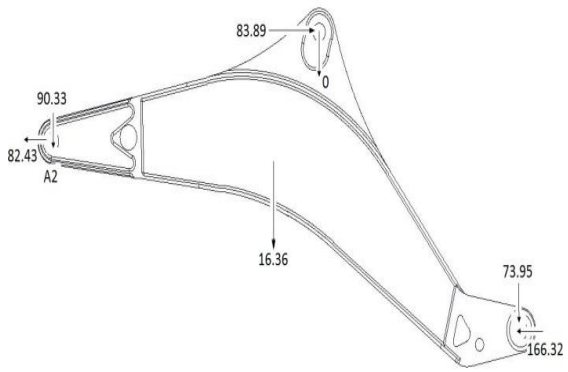

Fig. 6.1(c$_2$) Free body diagram of backhoe loader boom

Again considering boom in equilibrium,
$\Sigma F_X = 0$
$F_{7H} - F_{2H} + F_{1H} = 0$…… (19)
$83.89 - (-82.43) + F_{1H} = 0$
$F_{1H} = -166.32$kN
$\Sigma F_Y = 0$
$F_{2V} - F_{gh} - F_{1V} = 0$ …… (20)
$-90.33 - 16.36 - F_{1V} = 0$
$F_{1V} = -73.95$kN
Where,
F_{1H} = horizontal (X) force at point A_1
F_{1V} = vertical (Y) force at point A_1
The minus sign in table 3 shows the direction of the forces.

Table 3: Static forces on the boom joints

Joints	Horizontal (X) component (kN)	Vertical(Y) component (kN)
A_2	-82.43	-90.33
A_7	83.89	0
A_1	-166.32	-73.95

Table 4: Material properties: HARDOX 400

Sr. no.	Property	Value	Unit
1	Density	7800	Kg/m3
2	Modulus of elasticity	210000	MPa
3	Poisson's ratio	0.29	--
4	Yield strength	1000	MPa
5	Ultimate tensile strength	1250	MPa

7. Linear Static Analysis of Existing Backhoe Loader Boom Using FEM

To perform FEA of the Existing boom, continuum (boom model) is discretized into finite number of elements through meshing process and boundary conditions are applied to the system. Fixed supports are applied to boom where it comes in contact with the backhoe attachment system. Then the total load consisting the effect of digging force reaction transmitted through arm are applied on boom as shown below

7.1 Mesh details

Element Type: Tetrahedron

No. of Elements: 62276

No. of Nodes: 119752

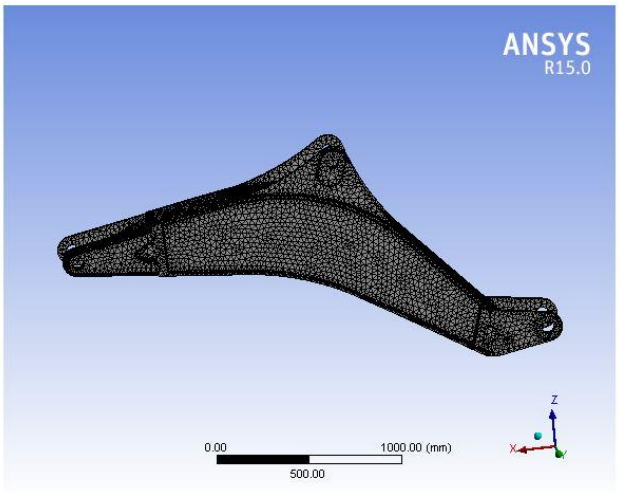

Fig. 7.1(a) Meshed model

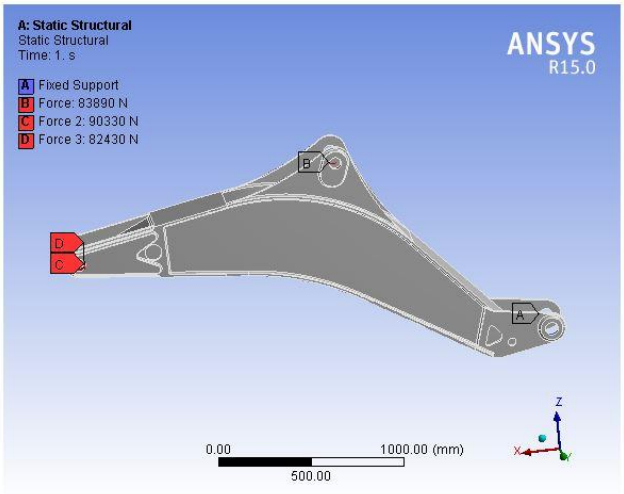

Fig. 7.1(b) Applied forces and boundary conditions

7.2 Deformation plot

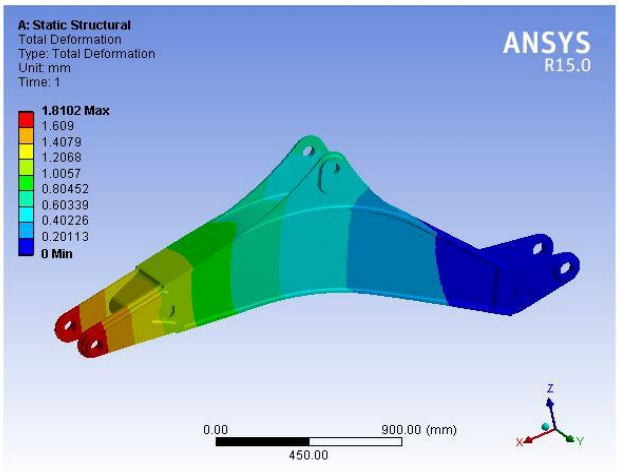

Fig.7.2 Maximum displacment of 1.81 mm is obsreved

7.3 Von-misses stress plot

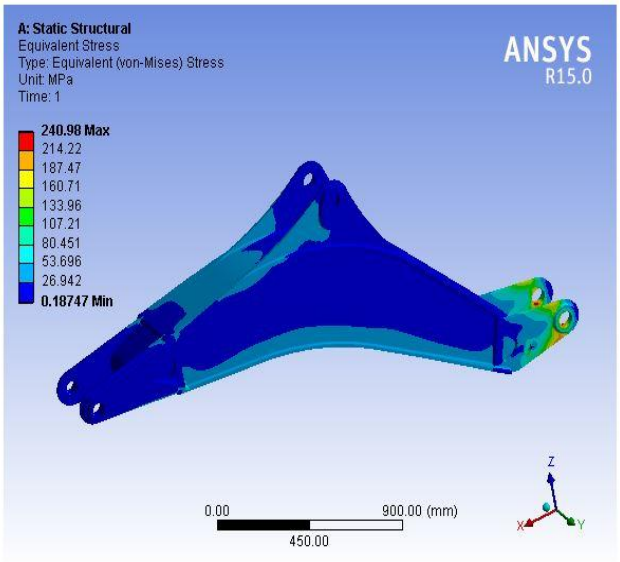

Fig. 7.3 Maximum Stress of 240.98 MPa is obsreved

As the yield strength of the material is 1000MPa, the stresses are within limit and hence the design is safe.

Closure:

The linear static analysis of the existing boom given the maximum stress of the 240.98 MPa and the maximum deflection of 1.81 mm. By observing these stress and deflection plots, it can be concluded that we have great scope for optimization .

8. Topology Optimization Methodology

It is uses the highly advanced optimization algorithms;, Optistruct can be solve the most complex optimization problems with thousands of design variables in a very short period of time. Optistruct advanced optimization engine which allows users to combine the topology, topography, size and shape optimization methods to create the better and more alternative design proposals leading to structurally sound and lightweight design. Manufacturing requirements can also be defined as input to the simulation to create the design proposals that are easier to interpret and to manufacture.

8.1 Optimization results on backhoe loader boom

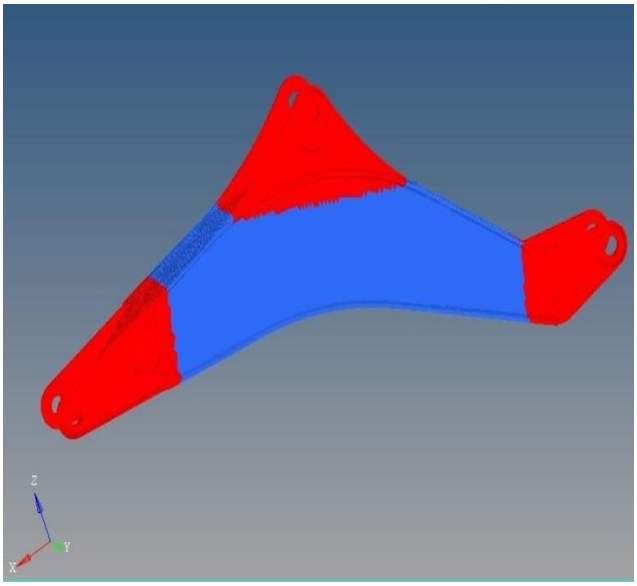

Fig. 8.1 Optimization scope

As it can be seen from the figure that the red colored regions are the most critical regions which cannot be disturbed at any conditions but blue colored region are very less stress concentrated form where material can be removed to with stand the current loadings

8.2. Iteration 1

The material has removed from sides of the hollow rectangular section of the boom arm as shown below

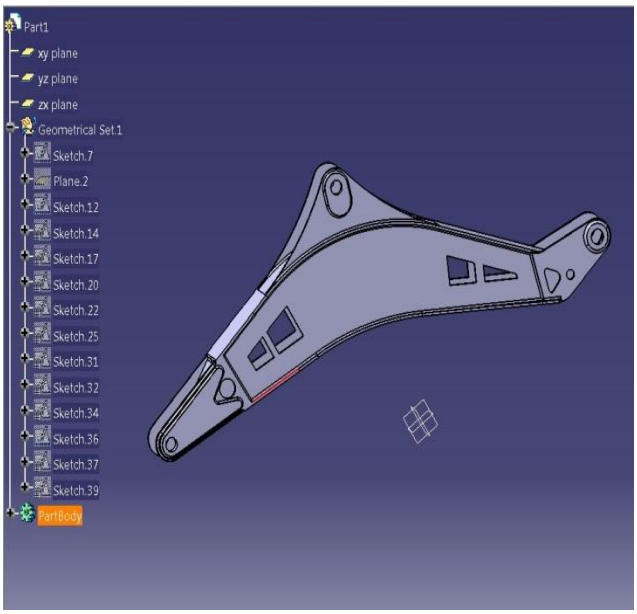

Fig. 8.2 Iteration-1 CAD model

8.2.1 Linear static analysis of excavator boom iteration-1

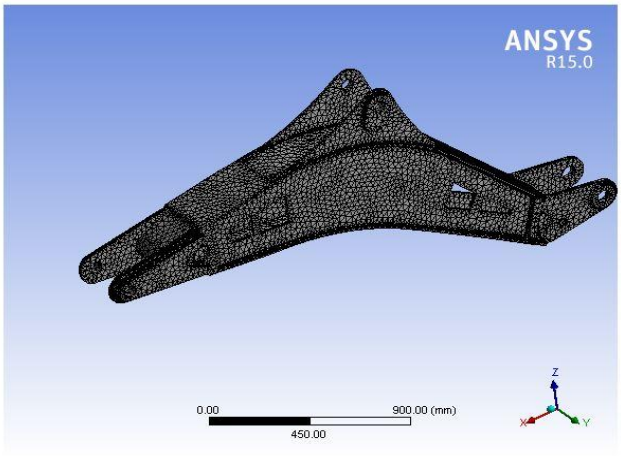

Fig. 5.2.1 Meshed model

8.2.2 Deformation plot

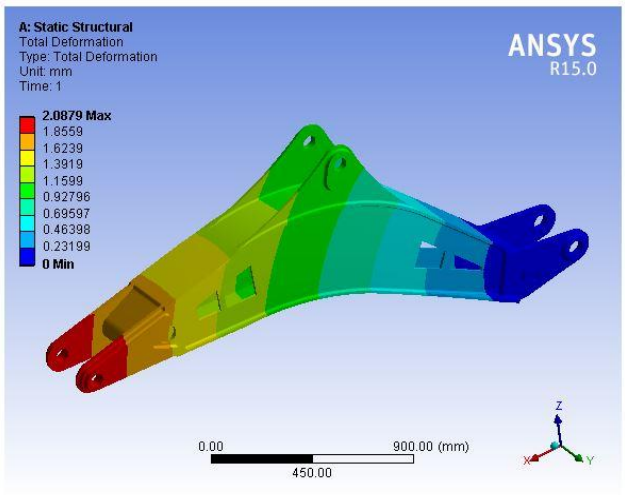

Fig. 8.2.2 Maximum displacment of 2.08mm is obsreved

8.2.3 Von-mises stress plot

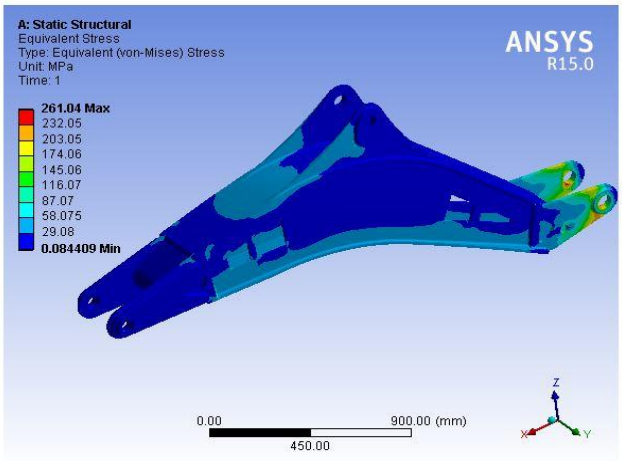

Fig. 8.2.3 Maximum Stress of 261.04 MPa is obsreved

Closure:

The linear static analysis of optimized backhoe loader boom (iteration_1) has given us the maximum stress of 261.04 MPa and maximum deflection of 2.08 mm. By observing stress and deflection plots, it can be concluded that the stress and deflection plots are within limit and hence the design is safe.

8.3 Iteration_2

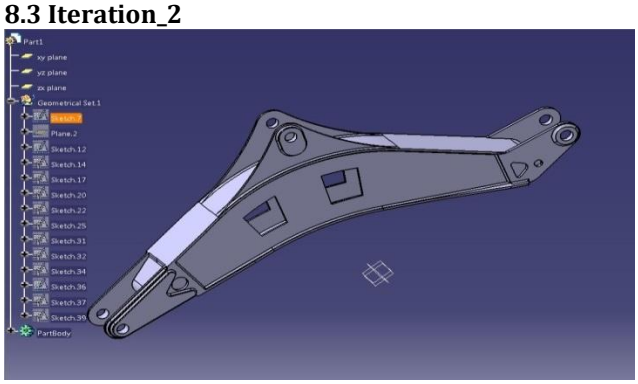

Fig. 5.3 Iteration-2 CAD model

8.3.1 Linear static analysis of backhoe loader boom iteration-2

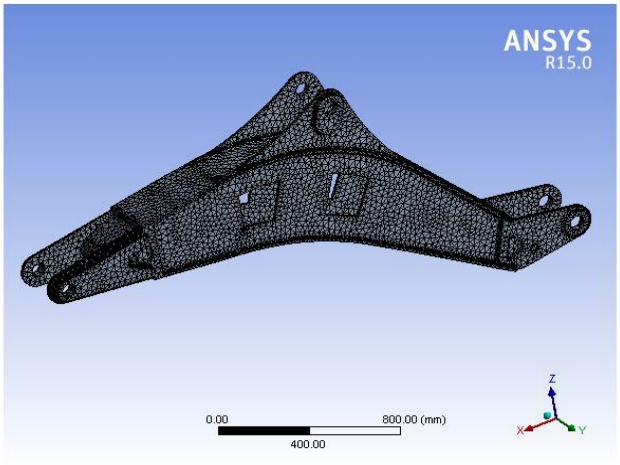

Fig. 8.3.1 Meshed model

8.3.2 Deformation plot

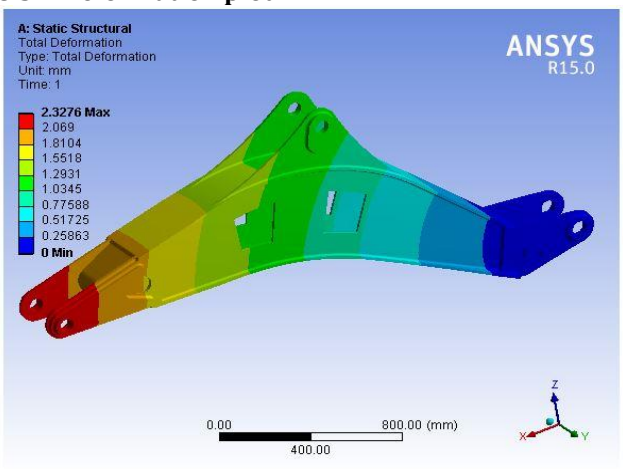

Fig. 8.3.2 Maximum displacment of 2.32 mm is obsreved

8.3.3 Von mises stress plot

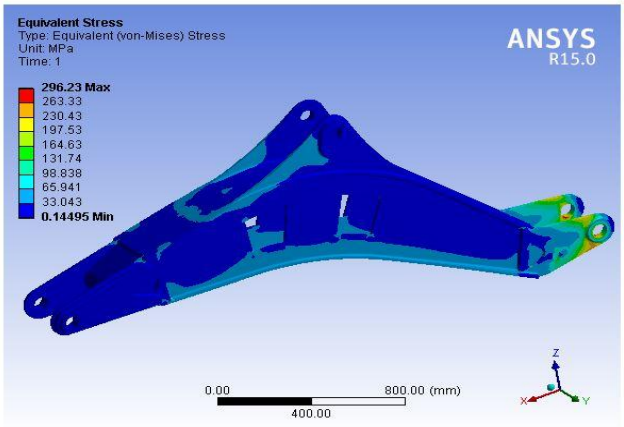

Fig. 8.3.3 Maximum Stress of 296.23 MPa is obsreved

Closure

The linear static analysis of optimized backhoe loader boom (iteration_2) has given us the maximum stress of 296.23 MPa and maximum deflection of 2.32 mm. By observing stress and deflection plots, it can be concluded that though the stress and deflection plots are slightly high for optimised boom but the stresses are within limit and hence the design is safe.

8.4 Iteration-3

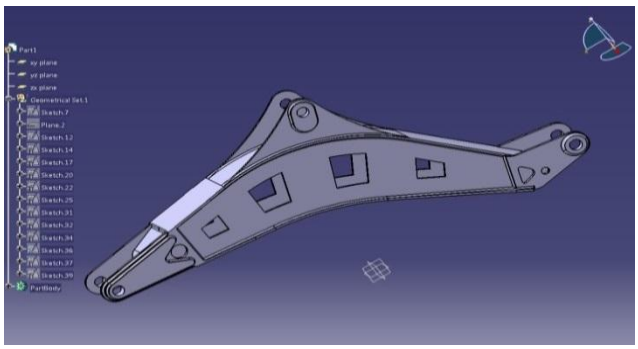

Fig. 5.4 Iteration-3 CAD model

8.4.1 Linear static analysis of backhoe loader boom iteration-3

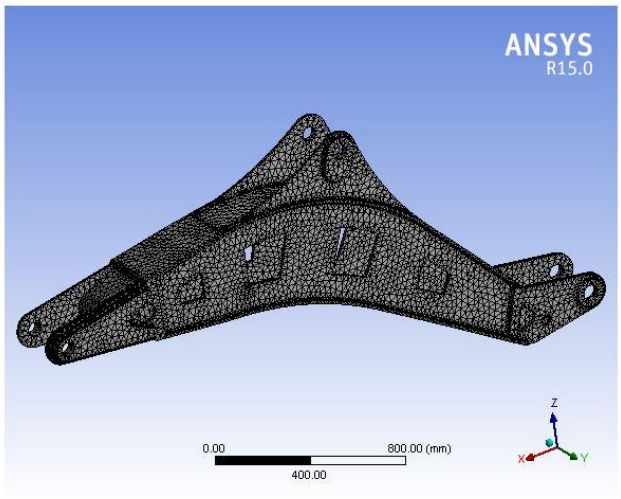

Fig. 8.4.1 Meshed model

8.4.2 Deformation plot

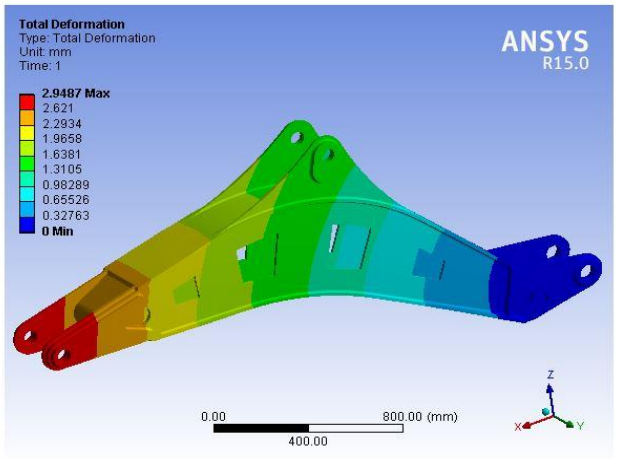

Fig. 8.4.2 Maximum displacment of 2.94 mm is obsreved

8.4.3 Von-mises stress plot

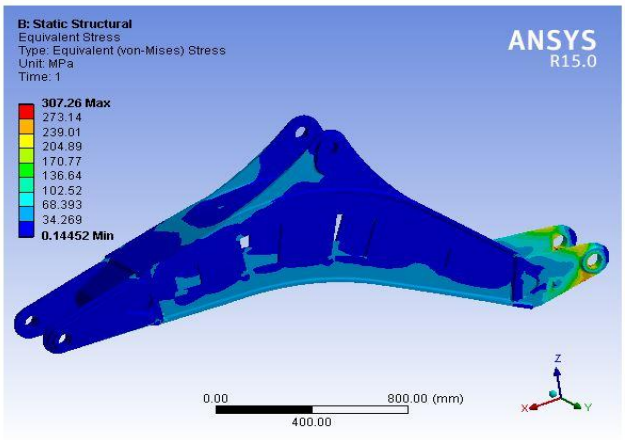

Fig. 8.4.3 Maximum Stress of 307.26 MPa is obsreved

9. Result and discussion

The linear static analysis of optimized backhoe loader boom (iteration_3) has given us the maximum stress of 307.26 MPa and maximum deflection of 2.94 mm. By observing stress and deflection plots, it can be concluded that though the stress and deflection plots are slightly high. since the yield strength of the material is 1000MPa, the stresses are within limit and hence the optimized design is safe.

Weight Reduction

Table 5: Weight Reduction

Backhoe loader boom	Weight (Kg)
Existing Model	406.1
Iteration 1	393.81
Iteration 2	391.3
Iteration 3	385.5

Therefore the reduction in weight is found to be – 5%

Conclusion

All the iterations carried out the final one shows the better results. Therefore we can conclude that it would be a better replacement for the conventional model. After the optimization the total weight reduction of approximately 5% is achieved. As the yield strength of the material is 1000MPa, the stresses are within limit and hence the design is safe. As the weight is reduced in turn it would increase to the performance of the boom. And hence the cost reduction.

References:

[1] Juber Hussain Qureshi, Manish Sagar, "FEA analysis of Boom of Backhoe Loader", International Journal of Engineering Research and Applications, Vol. 2, Issue 3, May-Jun 2012, pp.1484-1487, ISSN: 2248-9622.

[2] Ahmet Erklig, Eyüp Yeter, "The Improvements of the Backhoe-Loader Arms", Modeling and Numerical Simulation of Material Science, 2013, 3, 142-148.

[3] Hemanth Kumar BL, Nagesh N, "Design and Analysis of Boom Structure of a Backhoe Loader", International Journal of Innovative Research in Science, Engineering and Technology, Vol. 5, Issue 8, August 2016, ISSN(Online): 2319-8753, ISSN (Print): 2347-6710.

[4] Gaurav K Mehta, V. R. Iyer, Jatin Dave, "Finite Element Analysis and Optimization of an Excavator Arm", Nirma University, HTC 09.

[5] Bhaveshkumar P. Patel and J. M. Prajapati, "A Review on FEA and Optimization of Backhoe Attachment in Hydraulic Excavator", IACSIT International Journal of Engineering and Technology, Vol. 3, No. 5, October 2011.

[6] Bhaveshkumar P. Patel, Jagdish M. Prajapati, "Structural Optimization Of Mini Hydraulic Backhoe Excavator Attachment Using FEA Approach", machine design, Vol. 5, (2013) No.1, ISSN 1821-1259.

[7] Sachin B. Bende, Nilesh P. Awate, "Design, Modeling And Analysis Of Excavator Arm", International Journal of Design and Manufacturing Technology (IJDMT), ISSN 0976 – 6995(Print), ISSN 0976 – 7002(Online) Volume 4, Issue 2, May - - August (2013), pp. 14-20.

[8] Gui Ju-Zhang, Cai Yuan-Xiao, Qing-Tan and You Yu-Mo, "Finite element analysis of working device for hydraulic excavator", Journal of Chemical and Pharmaceutical Research, 2013, 5(12):123-128.

[9] Caiyuan Xiao and Zhang Guiju, "Modal Analysis on Working Equipment of Hydraulic Excavator", The Open Mechanical Engineering Journal, 2015, 9, 173-180.