ISSN 2395-1621

Analysing Heat transfer Augmentation using V-Jagged twisted tape

#1N.A.Uzagare, #2P.J.Bansod

1nivedita.uza@gmail.com

2Premendra.bansod@raisoni.net

#12Mechanical Department, Pune University
G.H.Raisoni of college and Engineering

ABSTRACT

The need to increase the thermal performance of heat exchangers, thereby affecting energy, material & cost savings have led to development & use of many techniques termed as Heat transfer Augmentation. Augmentation techniques increase convective heat transfer by reducing the thermal resistance in a heat exchanger. Turbulators - a type of passive heat transfer augmentation techniques have shown significantly good results in past studies. The proposed work is aimed at finding the heat transfer performance in a circular pipe by employing V- Jagged turbulator& also results are to be compared with plain twisted tape turbulator. These tapes will be tested for different configurations of twist ratios. It is to be verified whether such types of twisted tapes increase the rate of heat transfer with increase in turbulence or if it effects the pressure drop.

***Keywords*— Heat transfer,twistedtape,twistratio,pressure drop**

ARTICLE INFO

Article History

Received :18th November 2015

Received in revised form :

19th November 2015

Accepted : 21st November , 2015

Published online :

22nd November 2015

I. INTRODUCTION

The applications of heat transfer enhancement techniques can significantly increase the performance of heat exchanger, directing to the reduction of heat exchanger size as well as operating cost. Heat transfer enhancement has significant meanings for energy conservation and environmental problems. The induced swirl flow, potentially promotes fluid mixing, causes a thinner boundary layer and consequently, resulting in higher convective heat transfer rate.

Generally, heat transfer augmentation methods are classified in three broad categories:

Active method : This method involves some external power input for the enhancement of heat transfer .

Passive method: These methods generally use surface or geometrical modifications to the flow channel by incorporating turbulators or additional devices. For example, use of turbulators, use of rough surfaces etc.

Compound method: Combination of above two Methods.

Bodius Salam, SumanaBiswas have experimental investigated for measuring tube-side heat transfer coefficient of water for turbulent flow in a circular tube fitted with twisted tape turbulator. At comparable Reynolds number, Nusselt number in tube with twisted tape turbulator was enhanced by 2.9 to 4 times compared to that of smooth tube[1]. The augmentation of heat transfer for turbulent fluid flow through a tube by using double helical tape turbulators was investigated experimentally by M.M.K. Bhuiya , M.S.U. Chowdhury et.al.[2]. The effects of insertion of the helical tape turbulators with different helix angles (9°, 15°, 21° and 28°) on heat transfer and pressure drop in the tube for Reynolds number ranging from 22,000 to 51,000 were examined.Halit Bas, VeyselOzceyhan Flow friction and heat transfer behavior in a twisted tape swirl generator inserted tube are investigated experimentally. The twisted tapes were inserted separately from the tube wall. The effects of twist ratios (y/D = 2, 2.5, 3, 3.5 and 4) and clearance ratios (c/D = 0.0178 and 0.0357) were discussed

in the range of Reynolds number from 5132 to 24,989, and the typical one (c/D = 0) also tested for comparison[3].Smith Eiamsa-ard ,studied the pressure drop and heat transfer characteristics of flow through circular tube with regularly spaced twisted tape turbulator. The research show that the free spacing twisted-tapes, s = 2P gives the heat transfer lower than full length twisted tape around 5-15% while it can be decreased the pressure drop around 90%[4].Suhas V. Patil, P. V. Vijay Babu experimentally studied the Effects of insertion of a full length twisted tape and full length screw tape turbulator in a concentric double pipe heat exchanger ,square duct inner, and circular annulus on heat transfer and pressure drop characteristics[6].Murugesan, K. Mayilsamy investigated the effect of V-cut twisted tape turbulator on heat transfer, friction factor and thermal performance factor characteristics in a circular tube. for three twist ratios (y=2.0, 4.4 and 6.0) and three different combinations of depth and width ratios (DR=0.34 and WR=0.43, DR=0.34 and WR=0.34, DR=0.43 and WR=0.34). The obtained results show that the mean Nusselt number and the mean friction factor in the tube with V-cut twisted tape (VTT) increase with decreasing twist ratios (y), width ratios (WR) and increasing depth ratios (DR)[7].Smith Eiamsa-ard, PongjetPromvonge experimental studied the turbulent heat transfer and flow friction characteristics in a circular tube equipped with two types of twisted tapes: (1) typical twisted tapes and (2) alternate clockwise and counterclockwise twisted tapes (C-CC twisted tapes)were carried out. They included the tapes with three twist ratios, y/w = 3.0, 4.0 and 5.0, each with three twistangles, h = 30°, 60° and 90°. The experiments were performed over a Reynolds number range of 3000-27,000 under uniform heat flux conditions, using water as working fluid. The obtained results reveal that the C-CC twisted-tapes provide enhancement index than the typical twisted-tapes at similar operating conditions higher heat transfer rate, friction factor and heat transfer.

II. PROPOSED EXPERIMENTAL SETUP

The schematic diagram of experimental set-up is given in Fig.1.The experimental facility includes a blower, an orificemeterto measure the volumetric flow rate, the heat transfer test tube (800 mm). The MS test tube 26 mm inner diameter (D1),26.4 mm outer diameter (D2), and 2 mm thickness (t). The V-Jagged twisted tapes are tested in this experiment, with three different materials and three different width and depths-(4mm,4mm),(6mm.4mm),(4mm,6mm) but have same twist ratio (y/D =9.375). They are fabricated from aluminium,Copperand Brass.. Theschematic figure of the test tube with V-Jagged twisted tape insert is given in Fig.2. A 0.24 hp blower isused to force air through the test tube. A electric winding is wound across the the test tube.A uniform heat flux is provided to the external surfaces of the tube,Avariac transformer is used to control the heat flux,which controls the output power.In order to reduce the convective heat losses ,the outer surface of the test tube section is covered with insulating material like wool. A4-K type thermocouple are placed on the external surface of the test-tube to measure the surface temperature at the four locations.Te inlet and outlet temperature is also measured with help of 2 K type thermocouple.An manometer is used to measure the pressure drop across the test-tube.Anorificementer which is placed at outlet of the tube is used to measure volumetric flow rate of air after it passes the test tube.For this purpose a separate U-tube manometer is placed across orificemeter.The volumetric flow rate of air supplied from the blower is controlled by varying control valve position.During the experiment the external surface of the tube will be heated and the readings of temperature,volumetric flow rate,pressure drop of the bulk air will be taken after the system reaches steady state condition. The Nusselt number, Reynolds number, friction factor, heat transfer enhancement are calculated based on the average outer wall temperatures and the inlet and outlet air temperatures.

III. PROPOSED CONFIGURATION

The proposed work of heat transfer enhancement using passive technique consists of modified structure of plane twisted tape turbulator. A plane tape will be taken & be twisted on the lathe machine, while holding under tension. Before twist the tape will be jagged at a particular distances. It is proposed that the tape of width 25 mm will be considered for analysis. This tape will be a full length tape of the same length as that of the test section tube into which it will be inserted for heat transfer performance.

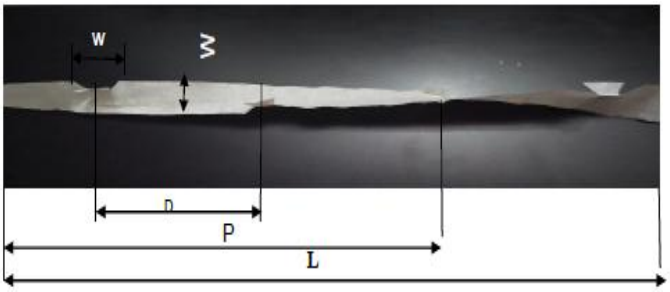

Fig.1V-Jagged twisted tape

W- Width of twisted tape turbulator
D- Longitudinal distance between two jagged shape
P- Pitch
Y=Twist ratio
L=length of Insert
T=Thickness of Insert
w=width of cut de=depth of cut

In this work following combinations of turbulators will be considered;

i. Twist ratio= 9.375mm

ii. Length of insert=800 mm

iii. Thickness of insert=1 mm

iv. Width of insert=25 mm

v. w=width of cut=4mm,6mm,4mm

vi. de=depth of cut=6mm,4mm,4mm

vii. Material to be used will be aluminium&copper,brass to check effect of material.

IV. DATA COLLECTION ANALYSIS

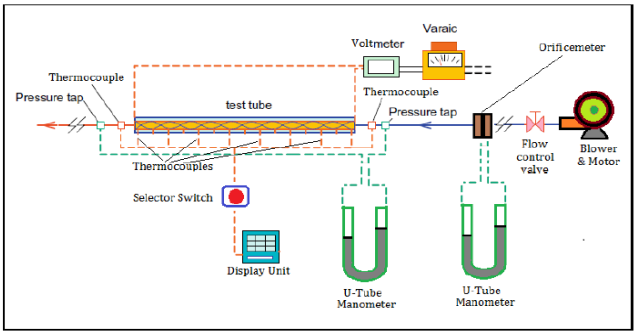

Fig.2Proposed Block Diagram of Experimental setup

A. Heat transfer Calculations:

The following data reduction equations will be used to determine heat transfer co-efficient and pressure drop.

Heat transfer calculations:

Ts=(T2+T3+T4+T5)/4 (1)

Tb=(T1+T6)/2 (2)

Velocity of air flow V=m/ρb*Ax(3)

Reynolds Number Re= VD/υ (4)

Q=m*CP(T6 - T1) (5)

h=Q/A(Ts-Tb) (6)

Nu=(h*Di)/K (7)

f=ΔP/(L/Di)*(ρb*v2/2) (8)

B. Validation Method:

The results obtained from proposed experiments on heat transfer and friction factor characteristics of the plain tube can be verified in terms of Nusselt number and friction factor. The Nusselt number and friction factor data obtained from the present plain tube can be validated with those from the proposed correlations by Gnielinski and Petukhov for the Nusselt number and friction factor.The results obtained from the present plain tube are to be agreed well with those from the proposed correlations within ±15% and ±15% deviations for the Nusselt number and friction factor, respectively. These results will reveal the accuracy of the present experimental facility and used measurement technique.

The correlations for present plain tube results for Nusselt number and friction factor, respectively, can be given as follows:

$N_u=0.0077Re^{0.893}Pr^{0.33}$

$f=0.687Re^{-0.336}$

V.CONCLUSION

1.Heat transfer using turbulators can increase the performance of heat exchanger by increasing heat transfer rate.

2. The heat transfer enhancement, thermal performance and friction factor characteristics of V jagged twisted tape turbulator inserted tube will be investigated experimentally

3. The experiments will be performed for the tube fitted with V jagged twisted turbulators with different material and also for different width and depth of jag.

4. The various parameters like heat transfer rate,heat transfer co-efficient,pressuredrop,friction factor will be determined by experimentation.

ACKNOWLEDGMENT

I express my deepest gratitude to my project guide Prof. Mr.Premendra J. Bansod, whose encouragement, guidance and support enabled me to develop an understanding of the subject.Besides, I would like to thank to Dr. R. R. Arakerimath, Head of the Mechanical Engineering Department ,Prof D.S.Patil ME Co-ordinator for their support and guidance.

REFERENCES

[1] Bodius Salam, SumanaBiswas, Muhammad &Mostafa Kamal Bhuiya, “Heat Transfer Enhancement in a Tube Using Twisted Tape Insert”, *Proceedings of the 13th Asian Congress of Fluid Mechanics*, Page 835-838.

[2] M.M.K. Bhuiya, M.S.U. Chowdhury, J.U. Ahamed, M.J.H. Khan , M.A.R. Sarkar, M.A. Kalam , H.H. Masjuki , M. Shahabuddin, “Heat transfer performance for turbulent flow through a tube using double helical tape inserts”, *International Communications in Heat and Mass Transfer*, Vol.39,2012,Page 818-825.

[3] Halit Bas, VeyselOzceyhan, “Heat transfer enhancement in a tube with twisted tape inserts placed separately from the tube wall”, *Experimental Thermal and Fluid Science* Vol.41 (2012) Page51–58.

[4] Smith Eiamsa-ard, ChinarukThianpong and PongjetPromvonge, “Experimental Investigations of Heat Transfer and Pressure Drop Characteristics of Flow through Circular Tube Fitted with Regularly-spaced Twisted Tape”,

[5] Suhas V. Patil, P. V. Vijay Babu , “Performance Comparison of Twisted Tape and Screw Tape Inserts in Square Duct”, *Proceeding of the International Conference on Advanced Science, Engineering and Information Technology* 2011,Page 50-55

[6] S. Eiamsa-ard , K. Wongcharee , P. Eiamsa-ard , C. Thianpong, “Heat transfer enhancement in a tube using delta-winglet twisted tape inserts”, *Applied Thermal Engineering*,Vol.30 (2010) Page 310–318

[7] P. Murugesan , K. Mayilsamy , S. Suresh , P.S.S. Srinivasan , “Heat transfer and pressure drop characteristics in a circular tube fitted with and without V-cut twisted tape insert” , *International Communications in Heat and Mass Transfer*,Vol. 38 (2011) Page329–334

[8] Smith Eiamsa-ard, PongjetPromvonge, “Performance assessment in a heat exchanger tube with alternate clockwise and counter-clockwise twisted-tape inserts”, *International Journal of Heat and Mass Transfer*, Vol. 53 (2010) Page1364-1372.

[9] Bodius Salam, SumanaBiswas, Muhammad &Mostafa Kamal Bhuiya, “Heat Transfer Enhancement in a Tube

Using Twisted Tape Insert", *Proceedings of the 13th Asian Congress of Fluid Mechanics,* Page 835-838.

[10] M.M.K. Bhuiya, M.S.U. Chowdhury, J.U. Ahamed, M.J.H. Khan , M.A.R. Sarkar, M.A. Kalam , H.H. Masjuki , M. Shahabuddin, "Heat transfer performance for turbulent flow through a tube using double helical tape inserts", *International Communications in Heat and Mass Transfer,* Vol.39,2012,Page 818-825.

[11] Halit Bas, VeyselOzceyhan, "Heat transfer enhancement in a tube with twisted tape inserts placed separately from the tube wall", *Experimental Thermal and Fluid Science* Vol.41 (2012) Page51–58.

[12] Smith Eiamsa-ard, ChinarukThianpong and PongjetPromvonge, "Experimental Investigations of Heat Transfer and Pressure Drop Characteristics of Flow through Circular Tube Fitted with Regularly-spaced Twisted Tape",

[13] Suhas V. Patil, P. V. Vijay Babu , "Performance Comparison of Twisted Tape and Screw Tape Inserts in Square Duct", *Proceeding of the International Conference on Advanced Science, Engineering and Information Technology* 2011,Page 50-55